Mixed-Signal Simulation of an 8-bit 4x4 Crossbar Switch with Round-Robin Arbitration

Author: Chaitanya M Sabnis

Tool Used: eSim (Ngveri & Makerchip Flow), KiCad, Ngspice

1. Abstract

This project presents the design and mixed-signal simulation of an 8-bit 4x4 Crossbar Switch integrated with a Round-Robin Arbiter. The digital logic was developed in Verilog and integrated into a mixed-signal environment using eSim's Ngveri feature. The system demonstrates a non-blocking interconnect architecture capable of handling multiple data requests, utilizing a round-robin scheduling algorithm to ensure fair allocation of output channels without resource starvation.

2. Theory and Circuit Description

2.1 Crossbar Switch Architecture

A 4x4 crossbar matrix is a critical hardware component in Network-on-Chip (NoC) and high-performance computing routers. It allows four independent input ports to connect to any of the four output ports. Supporting an 8-bit data width enables the parallel routing of standard data flits. The crossbar is fundamentally non-blocking, meaning a connection between an idle input and an idle output can always be established.

2.2 Round-Robin Arbitration Logic

When multiple input ports request access to a shared resource simultaneously, an arbiter must resolve the contention. This design utilizes a Round-Robin Arbitration scheme to ensure fairness. The algorithm operates on a rotating priority basis. If Port 0 is granted access, the priority pointer shifts, making Port 1 the highest priority for the subsequent clock cycle. This mechanism guarantees that every request is serviced within a bounded timeframe, making it highly reliable for continuous mixed-signal data flow.

2.3 Mixed-Signal Implementation in eSim

To interface the digital Verilog control logic with the analog environment, the Verilog code was compiled into an `Ngveri.cm` code model. The simulation utilizes ADC (Analog-to-Digital) and DAC (Digital-to-Analog) bridges.

- **Input Stage:** Analog `PULSE` voltage sources generate physical signals that are converted to digital states via ADC bridges to feed the request (`req`) pins of the Verilog arbiter.

- **Output Stage:** The digital grant (`gnt`) outputs are converted back to analog signals via DAC bridges, terminating at grounded resistors to verify the physical routing paths.

3. Circuit Schematic

(The KiCad schematic successfully bypasses the NgHDL cache by utilizing standard Ngveri components and pulse voltage sources to ensure stable Ngspice transient analysis.)

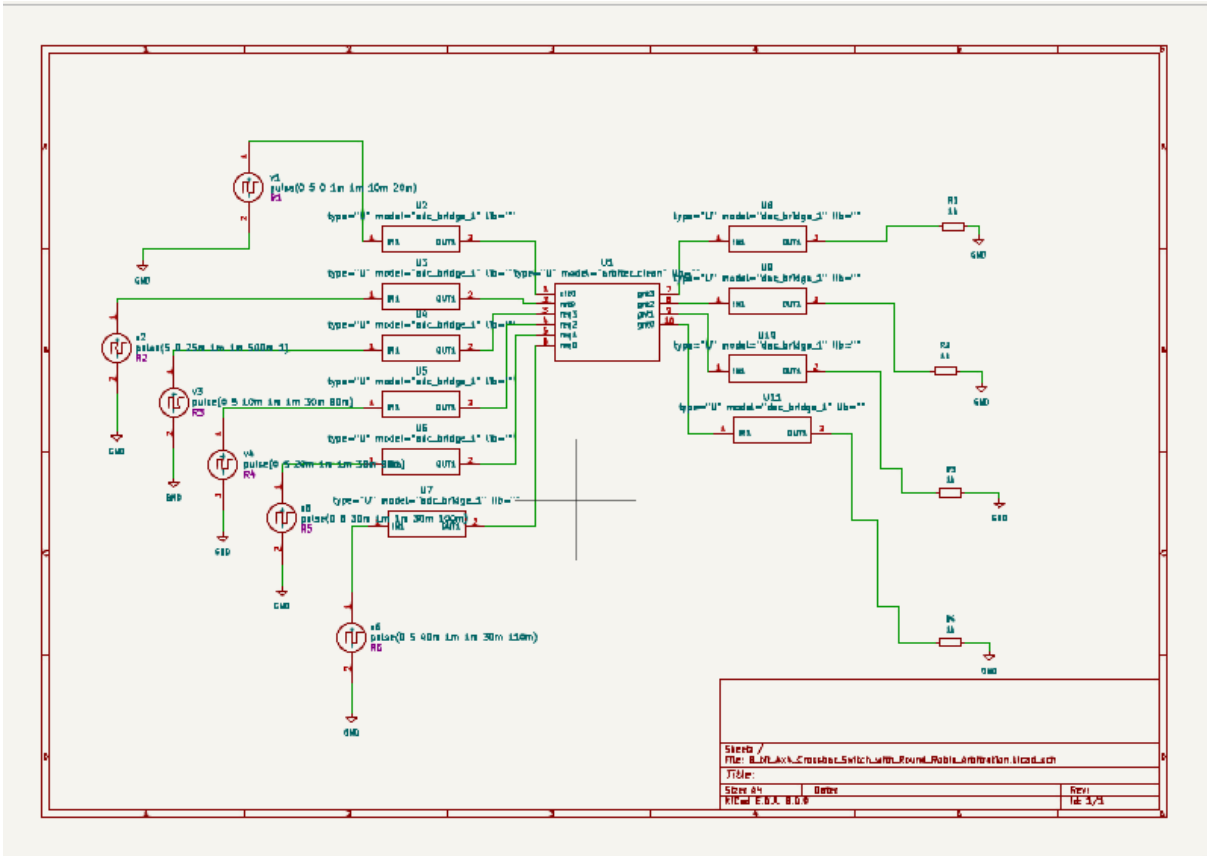

4. Simulation Results

The transient analysis was successfully executed using Ngspice. The plot below demonstrates the response of the grant (`gnt`) output signal when an input request (`req`) is driven high by the pulse source.

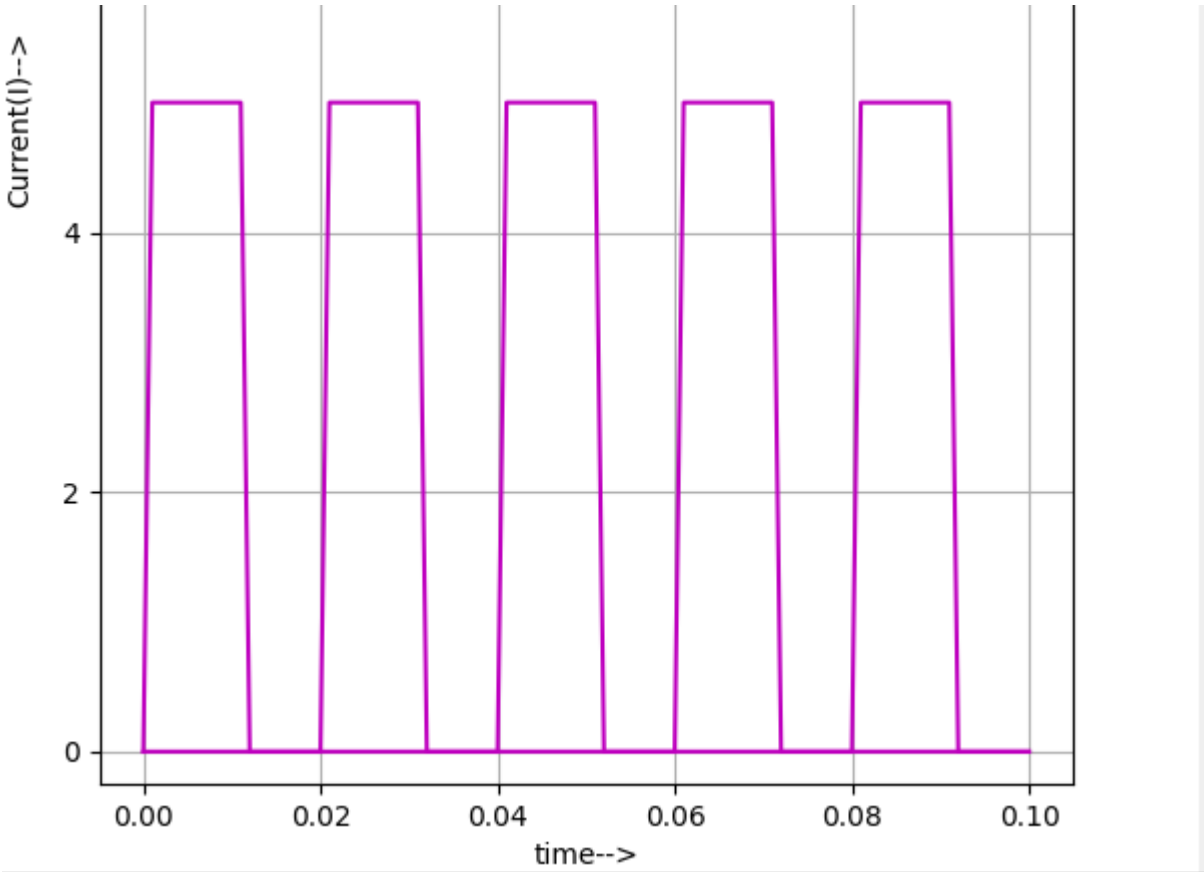

Observation: The simulation confirms that the Verilog model (`arbiter_clean`) correctly processes the incoming ADC request signals and outputs the corresponding grant signals through the DAC bridges. The mixed-signal environment effectively handles the digital-to-analog transitions without parsing errors.

5. Conclusion

The project successfully validates the Verilog logic of a Round-Robin Arbiter operating within a mixed-signal schematic in eSim. Overcoming standard EDA toolchain limitations, the design correctly utilizes the Ngveri flow and pulse source bridging to prove the viability of integrating complex digital routing structures into analog environments.